crest

H10
Roofing Tile

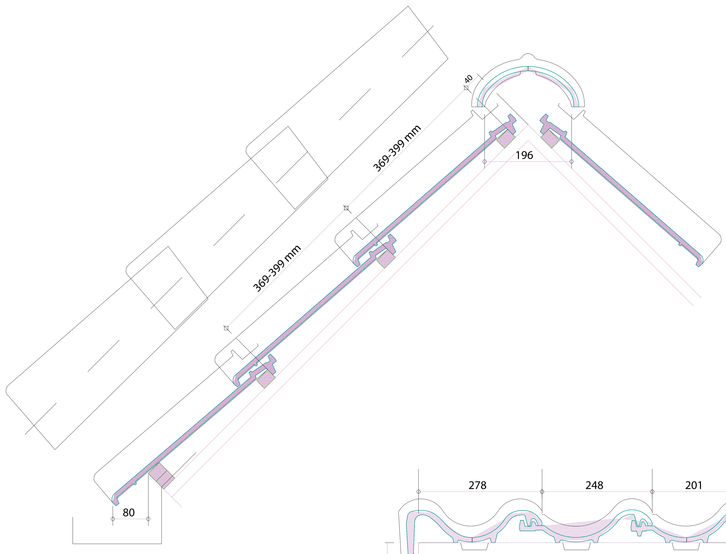

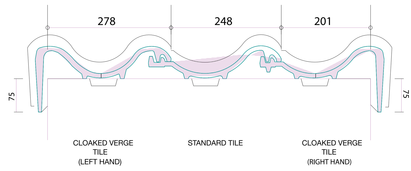

MONO RIDGE TILE

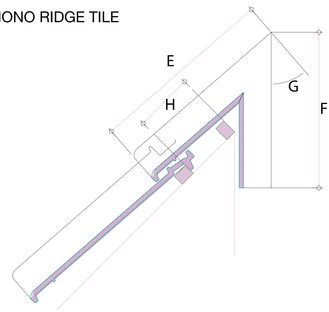

INTERNAL MANSARD TILE

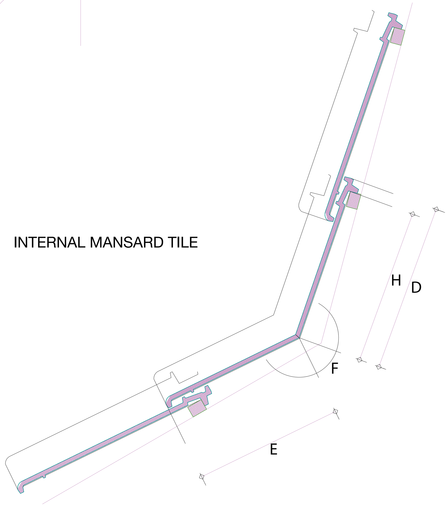

EXTERNAL MANSARD TILE

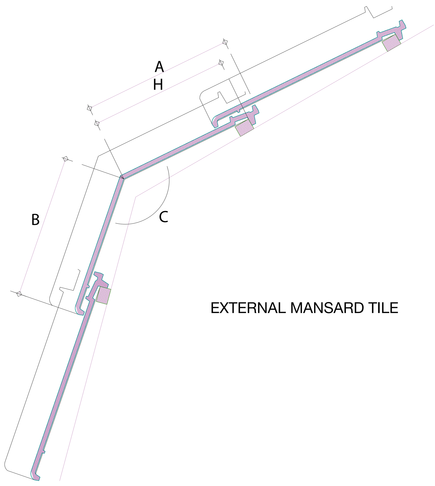

crest

H10
Roofing Tile
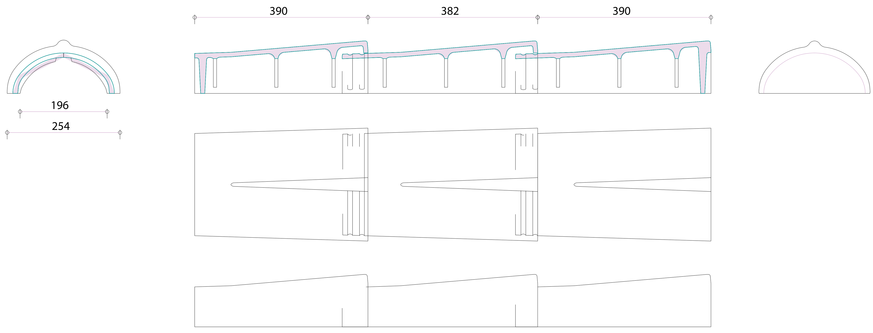
STANDARD TAPERED RIDGE